012 14 12 .. ..

SHRINK FIT CHUCKS (LARGE LENGTH)

DIN 69882-8

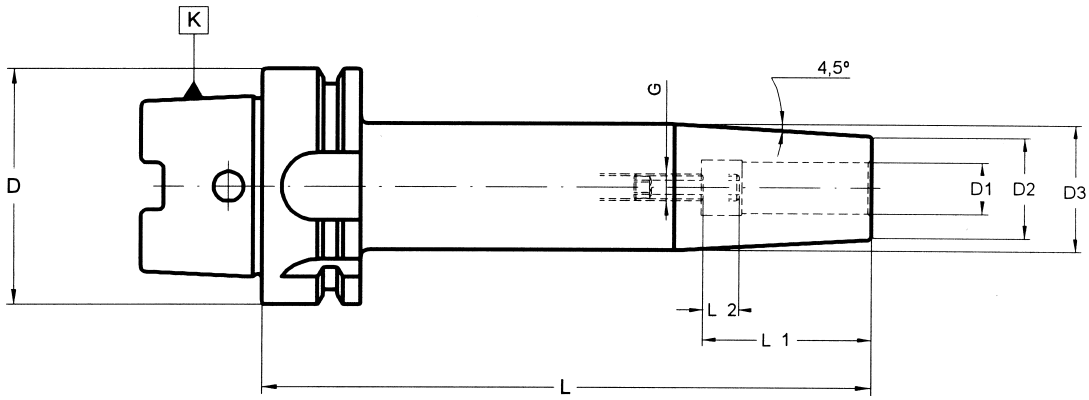

Maximum circular deviation between K & $D_1 \leq 0{,}003$

D HSK-A	D_1	D_2	D_3	L	L_1	L_2	G	COD.	€	
63	6	21	27	160	36	10	M-5	**012 14 12 34 06**		301 02 33 05 02
63	8	21	27	160	36	10	M-6	**012 14 12 34 08**		301 02 33 06 02
63	10	24	32	160	41	10	M-8	**012 14 12 34 10**		301 02 33 08 02
63	12	24	32	160	46	10	M-10	**012 14 12 34 12**		301 02 33 10 02
63	14	27	34	160	46	10	M-10	**012 14 12 34 14**		301 02 33 10 02
63	16	27	34	160	49	10	M-12	**012 14 12 34 16**		301 02 33 12 02

Design:
For Carbide, Cermet and HSS tool shanks according to DIN 6535 form HA and DIN 1835-1 form A
For tool shank tolerance of h4 for D > 6 mm. and h6 for D 6 mm.

Performance:
Balaced according to ISO 1940-1 to **25.000 r.p.m. G 2.5** . Under request, able to balance up to 50.000 r.p.m.

Delivery:
With built-in bored through stop screw. .